# OUTDOOR BBQ

# EQUIP 6

**Part Number**

**553229 (Aus)**
**553230 (N-Z)**

**BBQ Dimensions:**

| | |
|---|---|
| Width | 1600mm |
| Depth | 670mm |
| Height | 1200mm |

Month and Year of Manufacture: July 2021

Issue A.0
May 2021 PB
ECN # 12800
IPL Ref # 753229

553229 & 553230
BBQ - EQUIP 6

Masport®

Issue A.0
May 2021 PB
ECN # 12800
IPL Ref # 753229

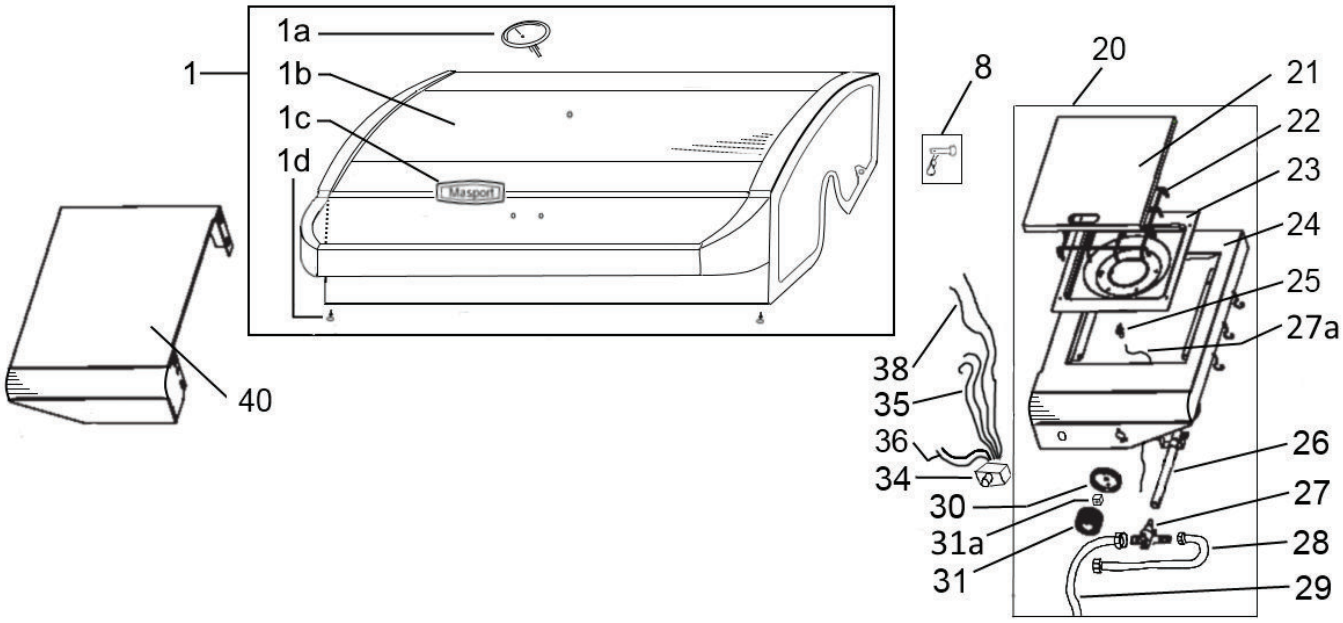


| Item | Part No | Description | | Qty |
|---|---|---|---|---|
| 1 | 546915 | **Hood Assy-Full/Window, 2021Blk/Blk** | | 1 |
| 1a | 546925 | *Temperature Gauge, 2021 | | 1 |
| 1b | 546924 | *Glass- Window, Hood 2021 | | 1 |
| 1c | 549767 | *Badge- MASPORT BBQ 17 Large | | 1 |
| 1d | 547664 | *Rubber Stopper, 15dia x 6mm | | 2 |
| 8 | 559638 | Pin- Hinge & "R" Clip | | 2 |
| 20 | 543261 | Table-Side, RH+M Assy MK2 | G/Blk | 1 |
| 21 | 543262 | *Lid- S/B, 280 x 346 | G/Blk | 1 |
| 22 | 559236 | *Trivet- Side Burner, Square | | 1 |
| 23 | 559360 | *Insert- Side Burner | | 1 |
| 24 | 543263 | *Table- Side, RH (S/B) | G/Blk | 1 |
| 25 | 559290 | *Electrode- Ignition, | S/B | 1 |
| 26 | 559237 | *Burner-Side | | 1 |
| 27 | 548613 | *Valve-Side, LPG, 0.92 8mm I/IGN | | 1 |
| 27a | 547099 | *Wire- Ignition, Side Burner (390mm) | | 1 |
| 28 | 559791 | *Hose-Side Burner, 450mm | | 1 |
| 29 | 559332 | *Regulator & Hose POL (AUS) | | 1 |
| 29 | 9154655 | *Regulator & Hose QCC (N-Z) | | 1 |
| 30 | 559339 | *Bezel- Control Knob | | 1 |
| 31 | 548701 | *Knob-BBQ, 8.0 S/Grip | SS | 1 |
| 31a | 548705 | **Insert- Knob, 8.0mm | | 1 |
| 33 | 547115 | *Jet- Side Burner 0.92 | | 1 |
| 34 | 547647 | Module- Ignition, 6 Pin 210 BBQ | | 1 |
| 35 | 548044 | Wire- Ignition, M/B, 900mm | | 2 |
| 36 | 548045 | Wire- Ignition, M/B, 530mm | | 2 |
| 38 | 548043 | Wire- Ignition, M/B, 1050mm | | 2 |
| 40 | 543285 | Table- Side, LH | G/Blk | 1 |

| Item | Part No | Description | Qty |
|---|---|---|---|
| 31a | 548705 | Insert- Knob, 8.0mm | 1 |

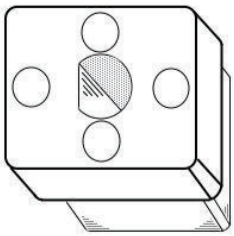

**Spares Note**
Insert 548705 can be used in knobs 548701
Correct rotation is important prior to the assembly.

## Not Illustrated

| | | |
|---|---|---|
| 558782 | BBQ Cookery Book | 1 |
| 559495 | Bolt- Pack | 1 |
| 559745 | BBQ Cover- Home Design UV | 1 |
| 546948 | Owner Manual | 1 |
| 559779 | Seal- Valve, Silicon | 1 |

When ordering spares: PLEASE QUOTE PART NUMBER & DESCRIPTION, NOT illustrated number. Item Qty = 1 per part unless stated differently.
**BOLD TEXT** = Assemblies. Descriptions starting with * = items included in the assemblies & may not be available as a spares item.
Determine the left or right hand sides by standing in the operating position (standing at the handle).

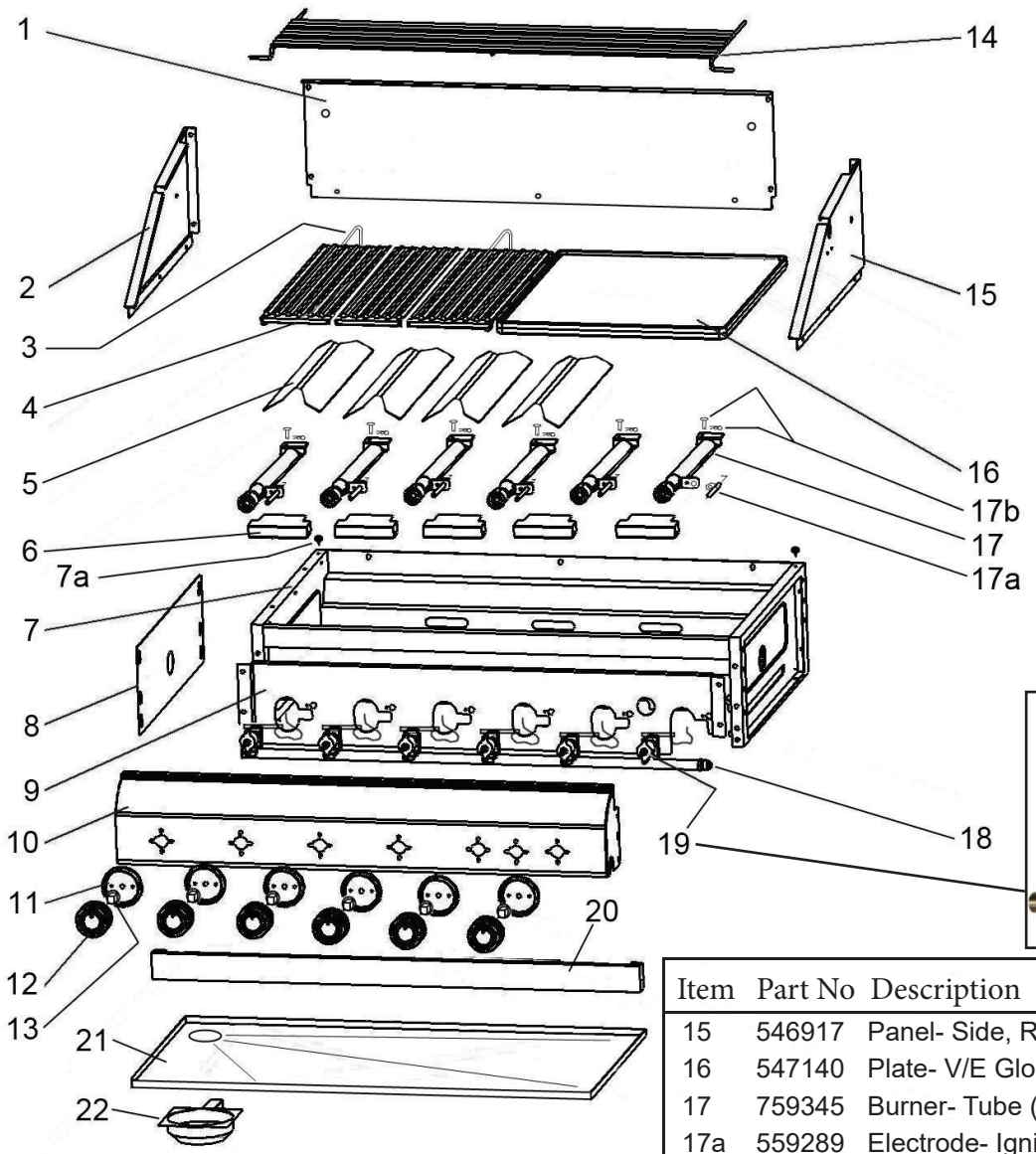


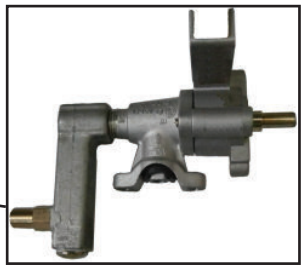

| Item | Part No | Description | Qty |
|---|---|---|---|
| 1 | 546918 | Panel- Rear Blk-G/Bdy | 1 |
| 2 | 546916 | Panel-Side,LH (25mm) Blk-G/Bdy | 1 |
| 3 | 555231 | Kebab Rack (Each) | 2 |
| 4 | 547141 | Grill- C/I Tapered 130 x 485 | 3 |
| 5 | 548642 | Flame Tamer, 100 x 410 A/ST | 4 |
| 6 | 559583 | Cross Light - S/S 6 Burner | 5 |
| 7 | 547143 | Grill Body- FAD, Frame Only 6B | 1 |
| 7a | 558826 | Rubber Stopper- 9 x 3 | 2 |
| 8 | 559353 | Panel- Heatshield, Side | 1 |
| 9 | 559338 | Panel- Heatshield, Front | 1 |
| 10 | 546930 | Dashboard- BBQ, EQUIP 6 | 1 |
| 11 | 559339 | Bezel- Control Knob | 6 |
| 12 | 548701 | Knob BBQ, 8.0 S/Grip SS | 6 |
| 13 | 548705 | *Insert- Knob, 8.0mm Stem | 1 |
| 14 | 559500 | Rack- Warming | 1 |

| Item | Part No | Description | Qty |
|---|---|---|---|
| 15 | 546917 | Panel- Side, RH Blk-G/Body | 1 |
| 16 | 547140 | Plate- V/E Gloss FAD 395 x 485 | 1 |
| 17 | 759345 | Burner- Tube (two pack) | 3 |
| 17a | 559289 | Electrode- Ignition, Main Burner | 6 |
| 17b | 559015 | Pin & “R” Clip 4.8d x 10 | 6 |
| 18 | 548864 | Manifold-Assy(ELE) MK2 6B | 1 |
| 19 | 548610 | *Valve- Main, LPG 0.92 8mm E/Ign | 6 |
| 19a | 549763 | *Jet, 6B Main 0.92 dia LPG | 6 |
| 20 | 543265 | Panel- Front, Grill G/Blk | 1 |
| 21 | 547239 | Tray- Drip, FAD SS 796x435 | 1 |
| 22 | 559242 | Cup- Grease, FAD | 1 |

## Not Illustrated

| | | | |
|---|---|---|---|
| | 559761 | Skewer- Kebab 7mm x 400mm SS | 8 |

When ordering spares: PLEASE QUOTE PART NUMBER & DESCRIPTION, NOT illustrated number. Item Qty = 1 per part unless stated differently.
**BOLD TEXT** = Assemblies. Descriptions starting with * = items included in the assemblies & may not be available as a spares item.
Determine the left or right hand sides by standing in the operating position (standing at the handle).

553229 & 553230
BBQ - EQUIP 6

Masport®

Issue A.0
May 2021 PB
ECN # 12800
IPL Ref # 753229

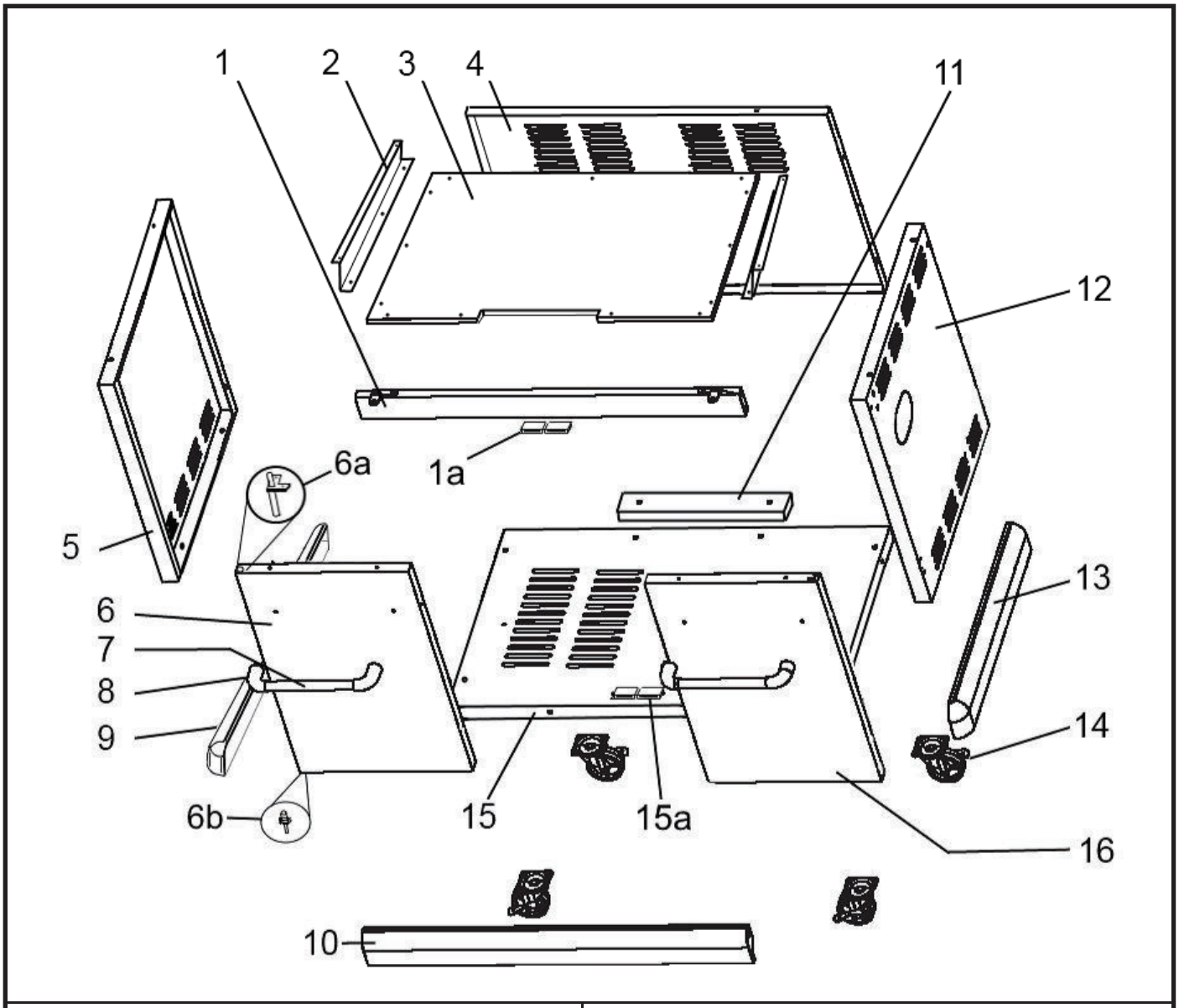


| Item | Part No | Description | | Qty |
|---|---|---|---|---|
| 1 | 543266 | Panel- Top, Front | G/Blk | 1 |
| 1a | 548239 | *Magnet- Door | | 2 |
| 2 | 543267 | Panel- Top, Side Trolley | G/Blk | 2 |
| 3 | 543268 | Panel- Top, Trolley | G/Blk | 1 |
| 4 | 543269 | Panel- Rear, Trolley | G/Blk | 1 |
| 5 | 543270 | Panel- Side, LH Trolley | G/Blk | 1 |
| 6 | 543286 | Door Assy LH-Inner ZP, Outer | G/Blk | 1 |
| 6a | 547130 | *Hinge- Top,Door | | 1 |
| 6b | 547131 | *Hinge- Bottom,Door | | 1 |
| 7 | 559334 | Handle- Door, Tube insert | | 2 |
| 8 | 559206 | Bracket- Handle, Door | | 4 |
| 9 | 543271 | Apron, LH | G/Blk | 1 |
| 10 | 543272 | Apron- Front | G/Blk | 1 |
| 11 | 559571 | Weight- Bottom Panel | | 1 |
| 12 | 543273 | Panel- Side, RH Trolley | G/Blk | 1 |
| 13 | 543274 | Apron, RH | G/Blk | 1 |
| 14 | 559225 | Castor- Locking, Plate Mount | | 4 |
| 15 | 543275 | Panel- Bottom, Trolley | G/Blk | 1 |
| 15a | 548239 | *Magnet- Door | | 2 |
| 16 | 543287 | Door Assy RH-Inner ZP,Outer | G/Blk | 1 |

When ordering spares: PLEASE QUOTE PART NUMBER & DESCRIPTION, NOT illustrated number. Item Qty = 1 per part unless stated differently.
**BOLD TEXT** = Assemblies. Descriptions starting with * = items included in the assemblies & may not be available as a spares item.
Determine the left or right hand sides by standing in the operating position (standing at the handle).

## Data Plate 546943.b.0

| Name | Model | IAPMO Approval | | Injector (mm) | | Pressure (kPa) | Inp/Burn (MJ/h) | Total (MJ/h) |
|---|---|---|---|---|---|---|---|---|
| BBQ MASP ORIGIN | BG6286BE-WS | GMK10178 | ULPG: | BBQ<br>S/B | 0.93<br>0.92 | 2.75 | 6 x 11.70<br>1 x 10.99 | 81.19 |
| | | | NG: | BBQ<br>S/B | 1.38<br>1.62 | 1.00 | 6 x 9.60<br>1 x 12.80 | 70.4 |
| BBQ MASP ORIGIN PLUS | BG6286BS-WS-RRB | GMK10178 | ULPG: | BBQ<br>S/B<br>R/B | 0.93<br>0.92<br>0.98 | 2.75 | 6 x 11.70<br>1 x 10.99<br>1 x 12.70 | 93.89 |
| | | | NG: | BBQ<br>S/B<br>R/B | 1.38<br>1.62<br>1.68 | 1.00 | 6 x 9.60<br>1 x 12.80<br>1 x 12.70 | 83.10 |
| BBQ MASP ORIGIN DELUXE | BG6286BS-WS-RRB | GMK10178 | ULPG: | BBQ<br>S/B<br>R/B | 0.93<br>0.92<br>0.98 | 2.75 | 6 x 11.70<br>1 x 10.99<br>1 x 12.70 | 93.89 |
| | | | NG: | BBQ<br>S/B<br>R/B | 1.38<br>1.62<br>1.68 | 1.00 | 6 x 9.60<br>1 x 12.80<br>1 x 12.70 | 83.10 |
| BBQ MASP ELITE | BG6284BE-WS-RB | GMK10178 | ULPG: | BBQ<br>S/B<br>R/B | 1.10<br>0.92<br>0.98 | 2.75 | 4 x 17.50<br>1 x 10.99<br>1 x 12.70 | 93.69 |
| | | | NG: | BBQ<br>S/B<br>R/B | 1.60<br>1.62<br>1.68 | 1.00 | 4 x 13.00<br>1 x 12.80<br>1 x 12.70 | 77.50 |
| BBQ MASP EQUIP 6 | BG6286BE-WS | GMK10178 | ULPG: | BBQ<br>S/B | 0.93<br>0.92 | 2.75 | 6 x 11.70<br>1 x 10.99 | 81.19 |
| | | | NG: | BBQ<br>S/B | 1.38<br>1.62 | 1.00 | 6 x 9.60<br>1 x 12.80 | 70.4 |
| BBQ MASP SUPREME | BG6286BS-WS-RB | GMK10178 | ULPG: | BBQ<br>S/B<br>R/B | 0.93<br>0.92<br>0.98 | 2.75 | 6 x 11.70<br>1 x 10.99<br>1 x 12.70 | 93.89 |
| | | | NG: | BBQ<br>S/B<br>R/B | 1.38<br>1.62<br>1.68 | 1.00 | 6 x 9.60<br>1 x 12.80<br>1 x 12.70 | 83.10 |

Gas Supply Pressure, ULPG
Min: 2.70kPa; Max: 3.45kPa
Gas Type: NZ: Universal LPG or NG
AUS: ULPG or NG

Gas Supply Pressure, NG: 1.13 kPa

Complies to:
Standard AS/NZS 5263.1.7

Minimum Clearance :
From Top of BBQ: 1000mm, From Sides: 430mm, From Rear : 430mm

Distributed by
**MASPORT LIMITED**

MASPORT LIMITED
320 Ti Rakau Drive, East Tamaki, Auckland 2013, New Zealand

MASPORT AUSTRALIA PTY LIMITED
27 Commercial Drive, Dandenong South, Victoria 3175, Australia

Read the instructions before using the appliance

**USE OUTDOOR ONLY**

Do not install in, or connect to the consumer piping or gas supply system of a boat or caravan

**WARNING**: Parts of this appliance may be very hot, keep young children away

DO NOT REMOVE
AUSTRALIA AND NEW ZEALAND GAS SAFETY CERTIFICATION

IAPMO-R&T
OCEANA
GasMark

Made in P.R.C

546943.B.0

For storage and cylinder exchange, disconnect hose at the cylinder only, do not disconnect hose from the appliance.

## Optional Extras

### 559218 Rotisserie Set, 4/6 Burner 945mm

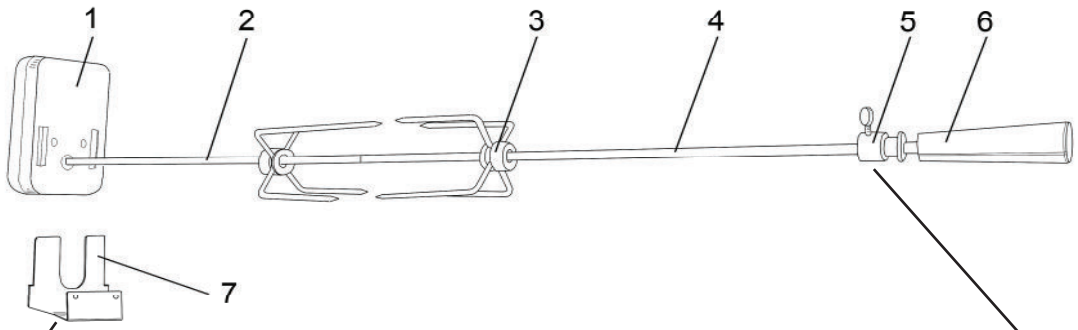

| | | | |
|---|---|---|---|
| 1 | 559239 | Motor- Rotisserie | 1 |
| 2 | 556297 | Prongs (each) | 2 |
| 3 | 559223 | Rod Only-Motor Side(550mm) | 1 |
| 4 | 559224 | Rod Only-Handle Side(400mm) | 1 |
| 5 | 559497 | Alignment Collar & Screw | 1 |
| 6 | 559769 | Handle (6mm thread) | 1 |
| 7 | 559494 | Bracket- Rotisserie | 1 |

When ordering spares: PLEASE QUOTE PART NUMBER & DESCRIPTION, NOT illustrated number. Item Qty = 1 per part unless stated differently.
**BOLD TEXT** = Assemblies. Descriptions starting with * = items included in the assemblies & may not be available as a spares item.
Determine the left or right hand sides by standing in the operating position (standing at the handle).

## Optional Extras Continued

| | | | |
|---|---|---|---|
| 547137 | Interchangeable Cooking System P/E Gloss | | 1 |
| 555231 | *Kebab Rack (each) | | 2 |
| 547136 | *Grill, P/E Gloss (390 x 485) | | 1 |
| 559761 | *Kebab Skewers | 7mm x 400mm | 8 |
| 559762 | *Pizza Stone | 290mm | 1 |
| 547134 | *Grill Insert, P/E Gloss | Insert dia 290mm | 1 |
| 547135 | *Plate Insert, P/E Gloss | Insert dia 290mm | 1 |
| 547223 | *Handle- Grill Insert, P/E Gloss | | 1 |

| | | |
|---|---|---|
| 559761 | Kebab Skewers (each) | 1 |
| 555231 | Kebab Rack (each) | 1 |

## Cooking Grills

| | | |
|---|---|---|
| 559219 | Grill- C/I Powder Coated Black 390 x 485 | 1 |
| 559640 | Grill- C/I P/Enamel, Matt Black 390 x 485 | 1 |
| 559520 | Grill- C/I P/Enamel GlossBlack 390 x 485 | 1 |
| 559765 | Grill- C/I P/Enamel , Matt Black390 x 485 (K/Rack) | 1 |

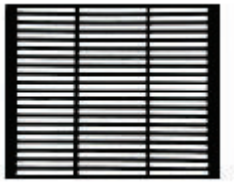

| | | |
|---|---|---|
| 547141 | Grill- P/Enamel, Gloss FAD 130 x 485 each<br>(Three are required per set-up)<br>(Kebab Rack ready) | 1 |

## Cooking Plates

| | | |
|---|---|---|
| 559220 | Plate- C/I Powder Coated Black 390 x 485 | 1 |
| 559641 | Plate- C/I P/Enamel, Matt Black 390 x 485 | 1 |
| 559521 | Plate- C/I P/Enamel GlossBlack 390 x 485 | 1 |

## Natural Gas Conversion

| | | |
|---|---|---|
| 548979 | KIT- NG 210 6 Burner + RB 2017 | 1 |

## Packaged Items

| | | |
|---|---|---|
| 759345 | Burner- 210 Series | 2 Per Pack |
| 759745 | Cover- BBQ, Home Design UV Packaged | 1 Per Pack |

When ordering spares: PLEASE QUOTE PART NUMBER & DESCRIPTION, NOT illustrated number. Item Qty = 1 per part unless stated differently.
**BOLD TEXT** = Assemblies. Descriptions starting with * = items included in the assemblies & may not be available as a spares item.
Determine the left or right hand sides by standing in the operating position (standing at the handle).